AAW EDUCATION

Planning and Presenting a Successful Demonstration

Frank B. Penta

TABLE OF CONTENTS

INTRODUCTION ii

PLANNING AND PRESENTING A SUCCESSFUL DEMONSTRATION

STEP 1 – PRE-PLAN FOR THE DEMONSTRATION 1

STEP 2 – DEVELOP THE DEMONSTRATION 2

STEP 3 – CREATE THE INSTRUCTIONAL HANDOUT 6

STEP 4 – DELIVER THE DEMONSTRATION 8

DEMONSTRATION CHECK SHEET 11

SOME DO'S 12

SOME DON'TS 13

TIPS FOR THE CAMERAMAN 14

DEMONSTRATION HANDOUT FOR "TURNING A MULTI-AXIS BIRDHOUSE" 15

INTRODUCTION

This booklet is intended for any turner who has been or will be conducting woodturning demonstrations, be they for community groups, woodturning clubs, or regional and national symposia. There are specific steps you can learn that will help you plan and present a more successful woodturning demonstration. When you know how to effectively pre-plan, develop, create a handout, and deliver a demonstration, your efforts will be rewarded. You will be a more relaxed, effective presenter, and your audience will have a more enjoyable, worthwhile learning experience. This booklet lists and describes each step of the planning/presentation process and gives applications directly related to the craft of woodturning.

Many thanks go to members of my local woodturning club, Chapel Hill Woodturners, for reviewing drafts of this booklet. Club members also allowed me to practice this demonstration in front of them, and their feedback helped me make important changes and improvements. I also want to thank my wife, Dusty, for her time and skill in reviewing this booklet.

Frank B. Penta
Woodsprite Turnings
Chapel Hill, NC

Notes

PLANNING AND PRESENTING A SUCCESSFUL DEMONSTRATION

There are four important steps that will help you to have a successful woodturning demonstration. Knowing how to pre-plan for a demonstration, develop a demonstration, create a handout, and deliver the demonstration properly will help you be a more effective demonstrator. Ways that I have found to successfully accomplish each of these steps are described below.

STEP 1—PRE-PLAN FOR THE DEMONSTRATION

In pre-planning for a demonstration you should consider time, scope, and equipment.

Time: When you are asked to conduct a demonstration, it is important to find out how much time is allocated. Keep in mind that the introduction, the demonstration itself, and a planned question and answer period need to fit into the allotted time. Attendees will probably ask questions during the demonstration itself, as well as at the end. Although questions may interrupt the flow of the demonstration, they do show that the audience is interested; they can also let you know where clarifications are needed. However, questions may take up too much time during the demonstration and cause you to be rushed or unable to finish. In that case, let the audience know you will include question-and-answer time at the end of your presentation and make note of or "park" their questions until the end.

Scope: Once you know the time frame for the demonstration, decide how much information can realistically be included within the allotted time. A typical demonstration includes a discussion of tools, woods, design considerations, surface treatments, finishing techniques, and sources of materials as well as demonstrations of techniques, skills and steps to produce a specific turning (or turnings).

Notes

When doing a short demonstration, you need to be selective as to which of the above to emphasize and demonstrate thoroughly. Less important elements can be abbreviated, left out, or included only in a handout. When making these selections, keep in mind the focus of the demonstration. Ask yourself what the most important ideas and skills you want the attendees to go away with are, and focus on these.

Equipment: It is essential to identify and check that all of the equipment you need for the demonstration will be available and in working order at the site. You will need to know the type of lathe, its spindle size, swing capability, and length of the ways to make sure that the chuck and other accessories you use will fit on that lathe.

STEP 2—DEVELOP THE DEMONSTRATION

Now you are ready to develop your demonstration. Consider each of the following and decide how you will include them in your demonstration.

A. Preparing the blank

1. **Choose the wood:** Determine the appropriate type and size of the wood needed for the turning you will be demonstrating. If possible, choose wood that is easy to work with.

2. **Mount the wood:** Decide which method you will use to mount the wood. At times this will be determined by the type of turning you will be demonstrating.

3. **Prepare the wood:** To prevent taking time away from the demonstration itself, pre-prepare the wood as much as possible prior to the demonstration. In fact, it is a good idea to pre-prepare several example pieces of important steps in the turning process.

Notes

4. **Rough shape the blank:** Do not use critical demonstration time to rough shape the blank. You should rough shape as much of the blank as possible prior to the demonstration. You can also shape the blank on a band saw beforehand. This shortens the time needed to true the blank and, thus, does not take time away from the demonstration itself.

5. **True up the blank:** Once the blank is mounted on the lathe, it will need to be trued up. The questions to ask yourself are: Can the blank be trued up beforehand? Is the truing up process necessary to the demonstration? If not, true up the blank so as not to lose actual time demonstrating.

B. Organizing the turning steps

1. **List and practice the turning steps:** List each of the steps needed to complete the project you are demonstrating, then actually work through them on the lathe to be sure that you have not left out one or more steps. It can be very helpful to write the steps down as you actually go through the process of turning the piece. This will help you see what will and will not need to be shown in the demonstration.

2. **Decide the type of finish to use:** Consider how the turning is to be finished, i.e., textured, beaded, sanded, etc. Is sanding important to the demonstration? Since sanding is not recommended due to health reasons, how will this affect the finish? If finishing techniques are important to the demonstration, you may want to consider having a pre-sanded piece available.

Notes

3. **Select essential steps:** Once you have identified every step needed to complete the demonstration project, you may need to eliminate or abbreviate some steps. If there are time constraints, differentiate those steps that are "must see" from those that are only "nice to see." If time does not allow you to demonstrate every step, prepare and show blanks with the "nice to see" steps already completed

4. **Sequence the turning steps:** It is important to sequence the steps of your demonstration in logical order. This will make it much easier for you to keep your place and for the attendees to follow along.

5. **Identify and complete steps in advance:** Have samples of key "must see" steps already completed and ready for the attendees to see. This will save valuable time during the demonstration; and, if you pass samples around to the attendees, they can inspect what each particular step looks like.

6. **Identify examples of the turning:** Display different versions of the completed turning so the audience will be able to see a variety of design options.

7. **Actually practice your demonstration:** Conduct the demonstration for friends or for your own club. This will help you get your timing down and enable you to be more relaxed when actually presenting your demonstration. Questions asked during the practice sessions should help refine your handout and demonstration.

Notes

C. Identifying Accessories and Materials

1. **Identify needed tools and accessories:** Make a list of the tools and all the accessories that you will need to complete the demonstration. If the tools or accessories you use are not easily available, give the participants information on where to get them.

2. **Identify sources of materials:** In addition to sources of tools and accessories, it is important to list sources for materials such as dyes, paints, veneers, etc. Attendees will appreciate knowing how to get these materials.

3. **Prepare backup materials:** Backup materials should be prepared for various stages in your presentation in case the unexpected happens. For example, the piece you are working may break. Having a replacement ready will allow you to continue with only a small interruption.

Notes

Step 3—Create the Instructional Handout

A. Prepare a handout: A good handout is important to the success of a demonstration because it will help attendees better understand the steps for completing the turning and it will serve as a guide to take home with them. Find out approximately how many will attend your demonstration so you have enough handouts for everyone. Your handout should include the following elements.

Title: short yet descriptive

Introduction: review of the items to be turned and an overview of the demonstration itself

Design considerations: short explanation about the turning's design

Wood: identify the wood that will be used; talk about other recommended wood and, if appropriate, list those you would not recommend

Tools: list tools and accessories needed for the project

Materials: list such things as dyes, paints, inks, and other materials used in the turning

Steps: list steps needed from start to finish to complete the project

Measurements: give accurate measurements for the project; these are particularly helpful to new turners

Illustrations: provide illustrations that accurately represent various stages of the project; include photos and labeled drawings

Notes

Sources of materials: provide an accurate, up-to-date listing of sources for all of your materials; include name, address, web site, and phone number, etc.

Suggestions for further study: suggest pamphlets, books, websites, magazines, etc., where turners can find further information on the project

B. Try out your handout

Measurements: double check all measurements

Illustrations: be sure photos and illustrations are accurate and correctly labeled

Proofread: proofread carefully and also have another turner review your handout

Test drive: use the handout yourself to complete the turning; better yet, see if another turner can use the handout to complete the turning successfully

Notes

STEP 4—DELIVER THE DEMONSTRATION

A. Preparation

1. **Lay out tools:** Lay out all tools to be used in the demonstration, including accessories and materials. This will make it easier for you to access your tools during the demonstration and will enable the attendees to view the tools and materials.

2. **Display work:** Display samples of the work to be turned for attendees to view. If possible, pass samples around. Participants appreciate being able to handle items and see them closely.

3. **Check out the lathe:** Familiarize yourself with the lathe. Making sure the lathe and accessories are working properly can prevent problems during your demonstration. Check that your accessories fit the lathe you will be using for the demonstration.

4. **Prepare the camera operator:** Briefly explain the demonstration to the camera operator and discuss the best camera angles for various parts of the demonstration.

5. **Distribute handouts:** While distributing handouts, explain their purpose and content.

Notes

B. Demonstration

1. **Introduction:** After setting up and distributing the handouts, introduce yourself and your work and explain the focus of the demonstration.

2. **Establish rapport:** Recognize the varied backgrounds and experiences represented by the attendees and explain the rationale of the turning techniques used. This is a sign of respect for the audience and helps establish rapport with the attendees.

3. **Explain steps:** As each of the steps are demonstrated, explain what you are doing and, most importantly, why you are doing it. If using a particular tool or technique, point it out and explain why and how you are using it.

4. **Answer questions:** Acknowledge all questions and try to answer them as completely and efficiently as possible. Repeat questions for the audience so everyone can hear them. If questions are taking too much time from the demonstration, let the attendees know that their questions are valued and assure them you will leave time to address them at the end of the demonstration. In answering questions, start by addressing the individual who asked the question, then move on to the audience as a whole. If your technique is questioned, do not be defensive, but rather recognize that there may be other ways of doing a particular technique.

5. **Speak to the audience:** When turning around to pick up a tool or write on the board, don't continue to talk with your back to the audience. Facing the audience when speaking makes it easier for the audience to hear and understand.

Notes

6. **Don't wander off topic:** Keep personal stories short and relevant to the demonstration. Humor is generally appreciated, unless it interferes with the demonstration.

7. **Feedback:** Check with the attendees from time to time to make sure they understand what you are doing. It is also useful to check on how well the audience can see the demonstration. Try to establish a comfortable climate, so that the attendees feel free to make comments or ask questions.

C. Teaching Tips

1. **Share your tools:** Woodturners like to see and touch tools, materials, and various stages of the work being turned. This is a good way to engage the audience.

2. **Health and safety considerations:** Out of consideration for the attendees' health you should do little or no sanding. You should always model safe turning behavior.

3. **Use visual aids:** The use of a white board or slides can help illustrate various aspects of your turning. However, limit the use of slides to those most relevant to what you are demonstrating. The use of many slides can be boring.

4. **Use notes:** You should feel comfortable using notes that contain the sequence of turning steps and key points you want to convey. Print your notes large enough to be easily read.

5. **Relax and enjoy yourself:** Have a great demonstration and most importantly, have fun! Thorough planning of your demonstration will make the presentation less stressful, and you should be able to relax and enjoy yourself.

DEMONSTRATION CHECK SHEET

Demonstration Title _____ Date _____

Club name _____ Location _____

Contact _____ Primary # _____ Secondary # _____

Time Allotted _____ Expected # of Attendees _____

Equipment available

Lathe Make _____ Swing size _____ Spindle Size _____

Chucks _____ Live centers _____ Drill press _____

Grinder _____ White board _____

Other _____

Travel arrangements

Transportation _____ Lodging _____

Host _____ Address _____

Phone # _____

NOTES

SOME DO'S

- Pre-plan carefully
- Provide an instructional handout
- Start with sharp tools
- Pre-write main topics on whiteboard
- Point out on whiteboard when beginning new topic
- Show respect for the audience
- Speak directly to the audience
- Face the audience when talking
- Provide finished examples
- Show the audience what you will be turning
- Pre-prepare steps where appropriate
- Make sure audience can see what is being done
- Make sure audience can hear what is being said
- Repeat questions
- Answer questions efficiently
- Keep personal stories short
- Inject humor carefully
- Clearly introduce the intent of the demonstration
- Thank your audience for their attendance
- Plan for the unexpected
- Have key stages pre-turned
- Acknowledge multiple ways to get it done
- Explain why you chose your way
- Share credit where appropriate

SOME DON'TS

- Talk with your back to the audience
- Wander from the topic
- Forget the focus of the demonstration
- Be defensive
- Ignore questions
- Belittle the audience or any question
- Run over the allotted time
- Take your audience for granted
- Talk down to your audience
- Discount other approaches/techniques
- Use the word "I" too much
- Argue with anyone over technique
- Name drop
- Belittle yourself

Tips for the cameraman

- Watch the monitor, not the demonstration
  - You see what the audience sees
- Do not move camera during close-up shot
  - Makes finding the shot difficult
- Zoom back before moving camera
  - Makes finding the shot easier
- Slowly and smoothly zoom into close-up shots
  - Results in less jerkiness of the picture
- Use extreme close-up sparingly
  - Harder for audience to orient themselves to what they are seeing
- Check out camera functions before shooting
  - Knowing the camera will help produce better shots
- Let demonstrator know video capabilities/limitations
  - It is important for the demonstrator to know what the audience can see
- Determine with the demonstrator where to show tool close-ups
  - Helps demonstrator effectively show tools to audience
- Ask demonstrator to identify what is important to be seen
  - This will help in positioning the camera to key processes
- With demonstrator, sequence camera angles before starting
  - Should help in planning distant and close-up shots
- Continually check adequacy of lighting and focus
  - Important that the audience can see the action well
- Stay near the camera
  - You will be ready to make corrections

Turning a Multi-Axis Birdhouse

Introduction

The multi-axis birdhouses that I turn are generally about 7” tall and are designed to be free standing. The birdhouse itself is usually 1 ½” tall and 1 ½” in diameter and made from a tree branch. I leave the bark on the exterior for a natural look, while drilling out the center on the drill press. The birdhouse sits on a multi-axis stand and is capped with a multi-axis roof. I complete the birdhouse with an entrance hole and a perch, and then glue a small bird on the perch.

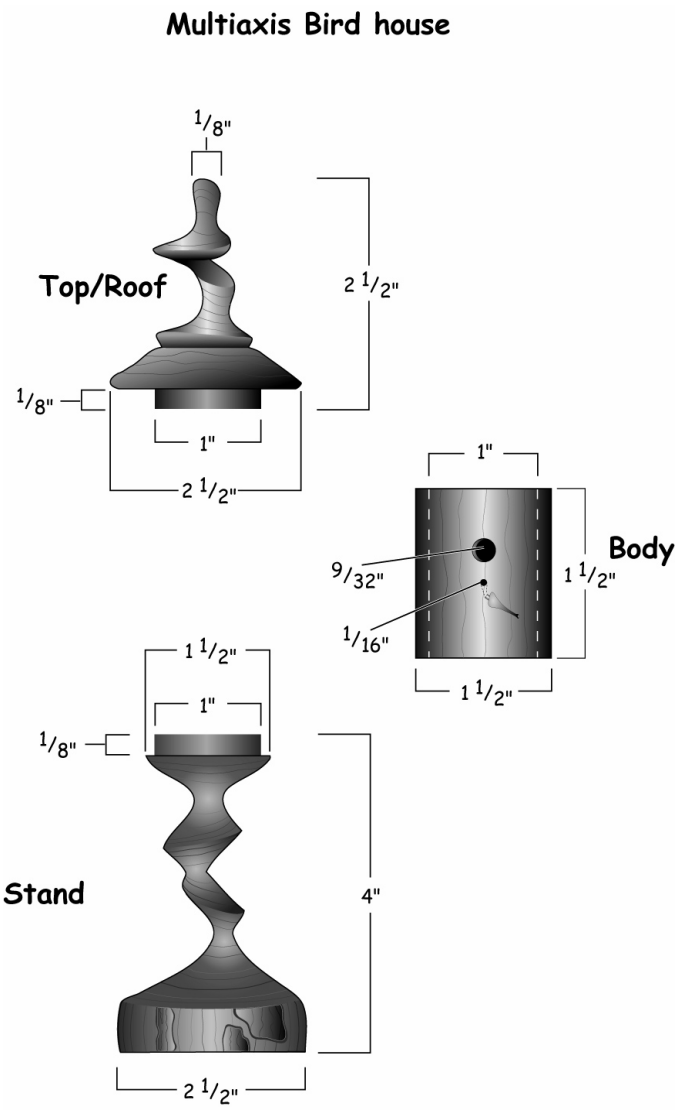

Components

- Top/Roof – 2 ½” high, 2 ½” diameter at the rim and 1/8” at the top.
- Birdhouse Body – 1 ½” high and 1 ½” diameter.
- Stand – 4” high 2 ½” diameter at the base and a 1” tenon at the top.

All measurements are relative, since you may want to make your birdhouse larger or

Tools

I do most of the multi-axis turning with a ¼” skew chisel and 3/8” spindle gouge. Additional tools include a ½” skew chisel, a thin parting tool

Birdhouse Body

1. I begin with the body. I look for interesting bark covered branches about 1 ½” in diameter.
2. Cut the branches 1 ½” to 2” lengths on the band saw.
3. The lengths are hollowed out with a 1” drill bit on the drill press. I usually predrill a smaller hole before drilling the 1” hole to reduce the stress on the small length of branch.
4. I then drill a 9/32” hole in the top half of the hollowed out body for the birdhouse entrance and a 1/16” hole below the entrance for the perch.
5. If not using the body immediately, I seal with sanding sealer the interior and ends of the body to prevent splitting.
6. When not using a natural looking body, I turn and drill the body on the lathe. After parting the body off the lathe, I drill the entrance and perch holes on the drill press.

If I find interesting branches I will make a number of bodies for

Stand

1. I rough out a 5” or 6” blank and turn a 2” tenon 3/8” wide for chucking.
2. After chucking the blank, I true up the end and turn a 1” diameter tenon 1/8” in length. This tenon will go into the bottom of the birdhouse.
3. I then turn the platform for the birdhouse to sit on. This platform is at the top of the stand at the tailstock end of the blank. If the platform is turned with the blank fully seated in the chuck, it will be on the same axis as the foot of the stand. However, sometimes I like to offset the blank before turning the platform so that the birdhouse is perched off to the side of the center axis.
4. I use a four-jaw chuck and mark on the chucked up blank the number of each of the 4 jaws.
5. I begin the multi-axis turning by loosening the grip of the jaws and tilting the blank 1/8” at jaw number 1.
6. After turning and sanding the platform, I loosen the jaws and reseat the blank.
7. To turn the next axis you need to slightly tilt the blank at jaws number 2.
8. After turning and sanding this section, I repeat the process at jaws number 3.
9. I keep rotating the jaws and tilting the blank until I am ready to turn the foot of the stand.
10. For the foot, I have the blank fully seated in the chuck. Turn and sand the foot, then part it off the lathe.

You must sand each axis before proceeding to the next axis.

You will need to lower your speed as your turning becomes more fragile.

Top/Roof

1. The top is a blank 4” to 5” in length and is turned in a similar manner as the stand, except instead beginning by turning a platform with a 1” tenon. I turn a small finial.
2. After turning the finial, I rotate the blank in the chuck in the same manner as the stand.
3. The slope of the roof and the 1” tenon at the base of the top is turned with the blank fully seated.
4. I under cut the slope of the roof for a more dramatic effect.

Remember to sand each axis.

Perch

1. I turn the perch from scrap wood. The perch is approximately ½” in length and 1/16” in diameter.

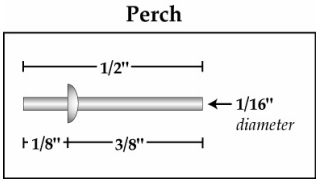

Turning a Multi-axis Box

Making a multi-axis box is similar to turning a multi-axis birdhouse, except that the body of the piece is replaced with a round box. The box is approximately 2 5/8” in diameter and 1 5/8” high. I usually have the top sit inside the edge of the box on a small recess. The base of the box has a 1” diameter recess 1/8” deep. This recess is for mounting the box to the stand. To turn the box, mount a 3” blank into a four jaw chuck. Shape the outside of the box and hollow the inside. After turning, hollowing and sanding jam chuck or, as I prefer, use a four-jaw chuck to expansion chuck the box. Refine the base and turn a one inch recess 1/8” deep to mount the box on the stand. Sand and finish.

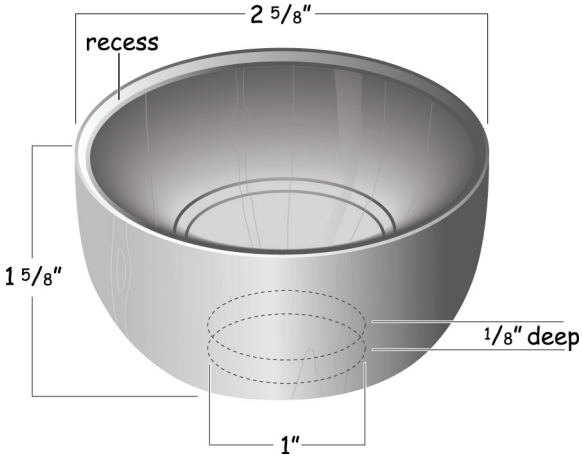

Planning Your Demonstration

Title of Demonstration	

Turning Steps in Sequence	

Equipment and Materials

Wood Selection	Finishing Materials and Accessories

Mounting Methods	Backup Materials

Tools and Related Accessories	Examples of Finished Turnings

Examples of Key Stages for Completing Piece	Steps Completed in Advance

Developing an Instructional Handout

Title

Introduction

Design Consideration

Wood Selection

Finishing Method

Materials

Further Study

Recommended Tools

Source of Materials

Turning Steps with Illustrations/photos